# SRMW

## HOLLOW SHAFT PUMP

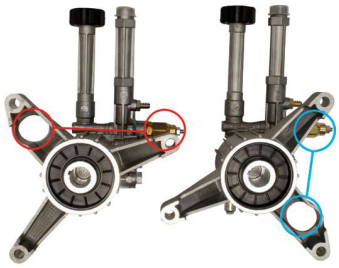

***Note:**
- SX Style - left handed pumps have a hole in the leg opposite of the unloader.
- Non-SX Style - right handed pumps have a hole in the leg on the same side as the unloader.

## *Residential*

140° F - Max Water Temp
3/4" GHA - Inlet Thread
22mm x 14 M - Discharge Thread
2.2 oz - Oil Capacity

TRV EZ

● aluminum head ○ thermal relief valve ● easy start valve

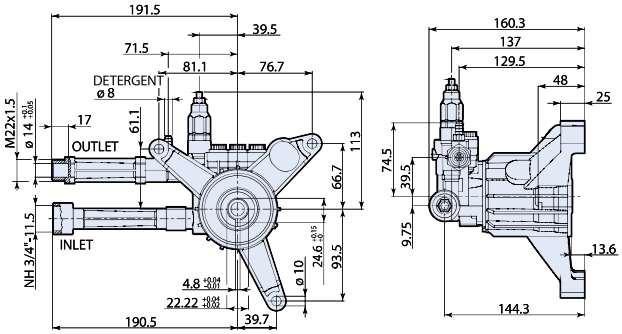


# **D** version

| MOD | MAX l/min | MAX gpm | MAX bar | MAX psi | ebhp | rpm | NET lbs | BORE DIA mm | STROKE mm | CRANKSHAFT ID STAMP | LIST PRICE $ |
|---|---|---|---|---|---|---|---|---|---|---|---|
| **SRMW 3400 rpm** D version 7/8" with Vertical Gas Flange | | | | | | | | | | | |
| SRMW22G26-EZ ● ○ ● | 8.3 | 2.2 | 173 | 2600 | 3.9 | 3400 | 7.3 | 12 | 8.3 | 5 | $280.92 |
| SRMW24G28-EZ ● ○ ● | 9.1 | 2.4 | 173 | 2800 | 4.6 | 3400 | 7.3 | 12 | 9.0 | 3 | $324.60 |
| SRMW22G26-EZ-SX ● ○ ● | 8.3 | 2.2 | 173 | 2600 | 3.9 | 3400 | 7.3 | 12 | 8.3 | 5 | $280.92 |
| SRMW24G28-EZ-SX ● ○ ● | 9.1 | 2.4 | 193 | 2800 | 4.6 | 3400 | 7.3 | 12 | 9.0 | 3 | $324.60 |

SX - 180° Rotated Shaft Configuration

## SPECIAL PARTS / KITS

| MOD | DESCRIPTION | LIST PRICE |
|---|---|---|
| AR42940 | Complete Manifold - aluminum | $172.51 |
| AR42142 | EZ start kit | $11.34 |
| AR42165 | Inlet - with o-ring | $27.86 |
| AR42166 | Outlet - with o-ring | $13.09 |
| AR42141 | Grub screw and washer | $4.72 |
| AR42125 | Chemical injection kit | $8.96 |
| AR43361 | Complete Manifold SRMW254G28 | $228.98 |
| AR64545 | Oil (4.5 oz) | $15.47 |

## REPAIR KITS

| MOD | DESCRIPTION | QTY | LIST PRICE |
|---|---|---|---|
| AR42499 | Valves | 6 | $32.27 |
| AR42161 | Pistons | 3 | $46.98 |
| AR42122 | Water Seals | 3 | $16.96 |
| AR2236 | Oil Seals | 4 | $21.58 |
| AR2237 | O-Rings | 16 | $18.21 |
| AR42118 | Unloader | 16 | $80.38 |
| AR42866 | Shutter Valve | 6 | $28.73 |